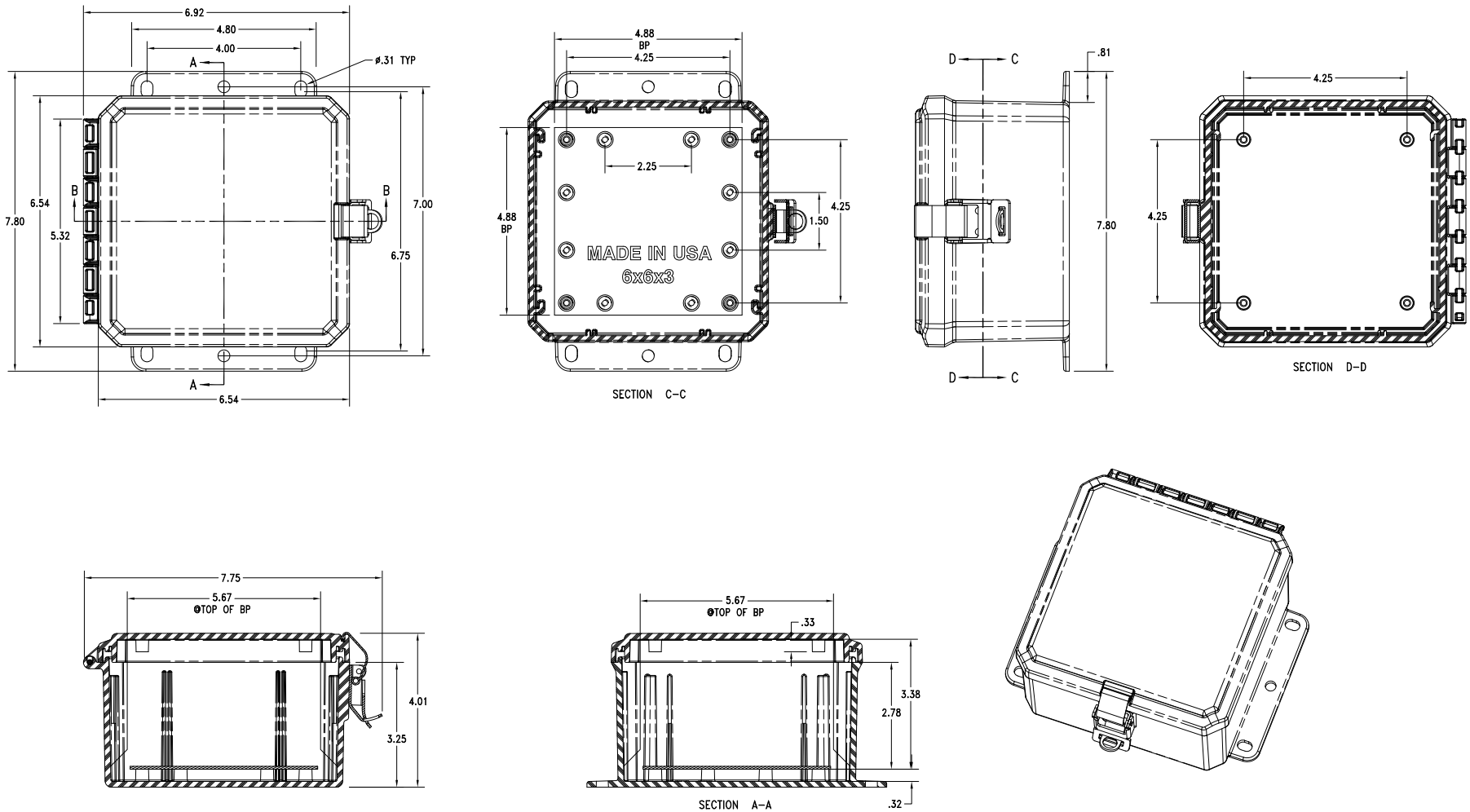

REV	DESCRIPTION	BY	DATE	ECN	APPROVED
A	RELEASED TO PRODUCTION AT REV A	W.T.	12-2-13		

DEFAULT TOLERANCES
DECIMAL .XX ±0.03 .XXX ±0.010
FRACTIONAL ± 1/64
ANGULAR ±1°

INTEGRA ENCLOSURES
7700 TYLER BLVD NORTH, OHIO 44240 (800-800-8000) FAX (440) 269-8000
NUM INDUSTRIES

SCALE	SHEET	DRAWN BY
FULL	1 of 1	W.TIDWELL

TITLE: 6X6X3 LP HINGED BOX ASSEMBLY

DATE	DRAWING NUMBER	REV
12.02.13	P6063LPLL	A